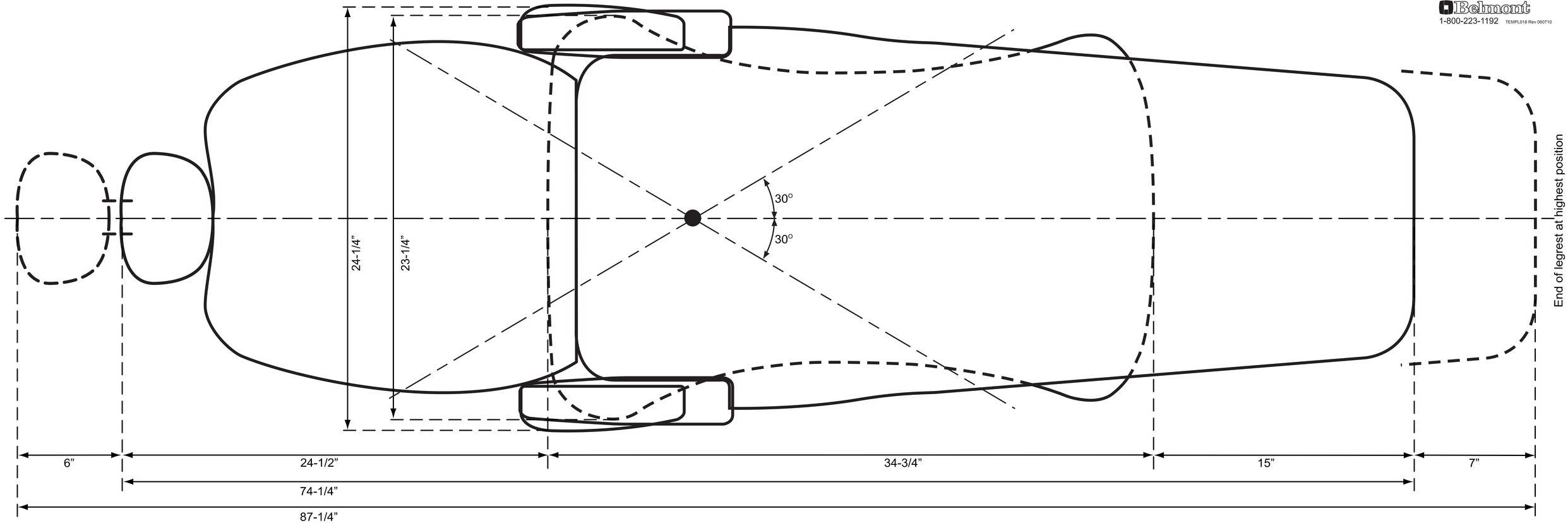B-50 Dental Chair
Full size template
Belmont
1-800-223-1192 TEMPL018 Rev 060710