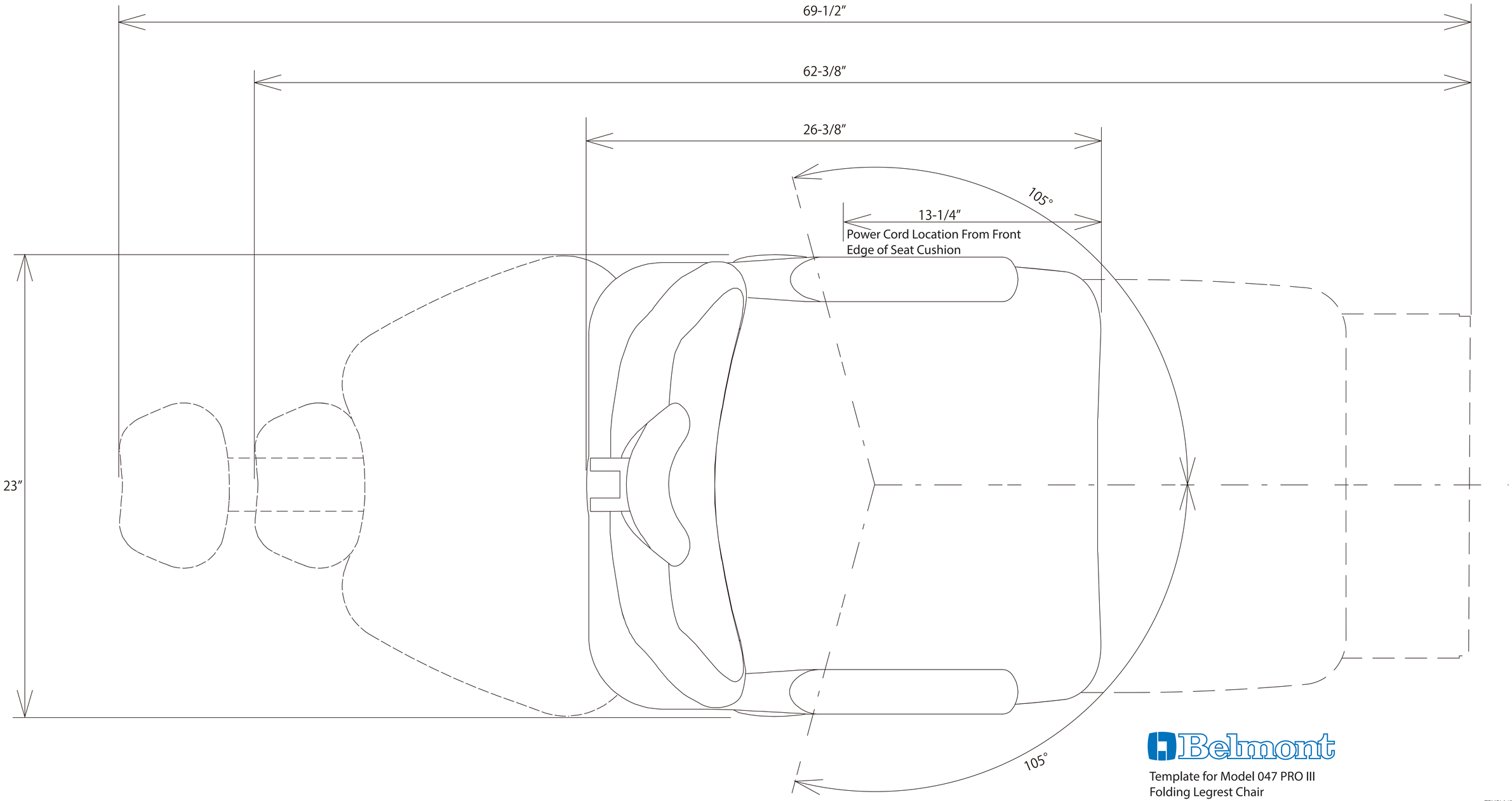

Belmont

Template for Model 047 PRO III
Folding Legrest Chair

TEMPL047
REV080219