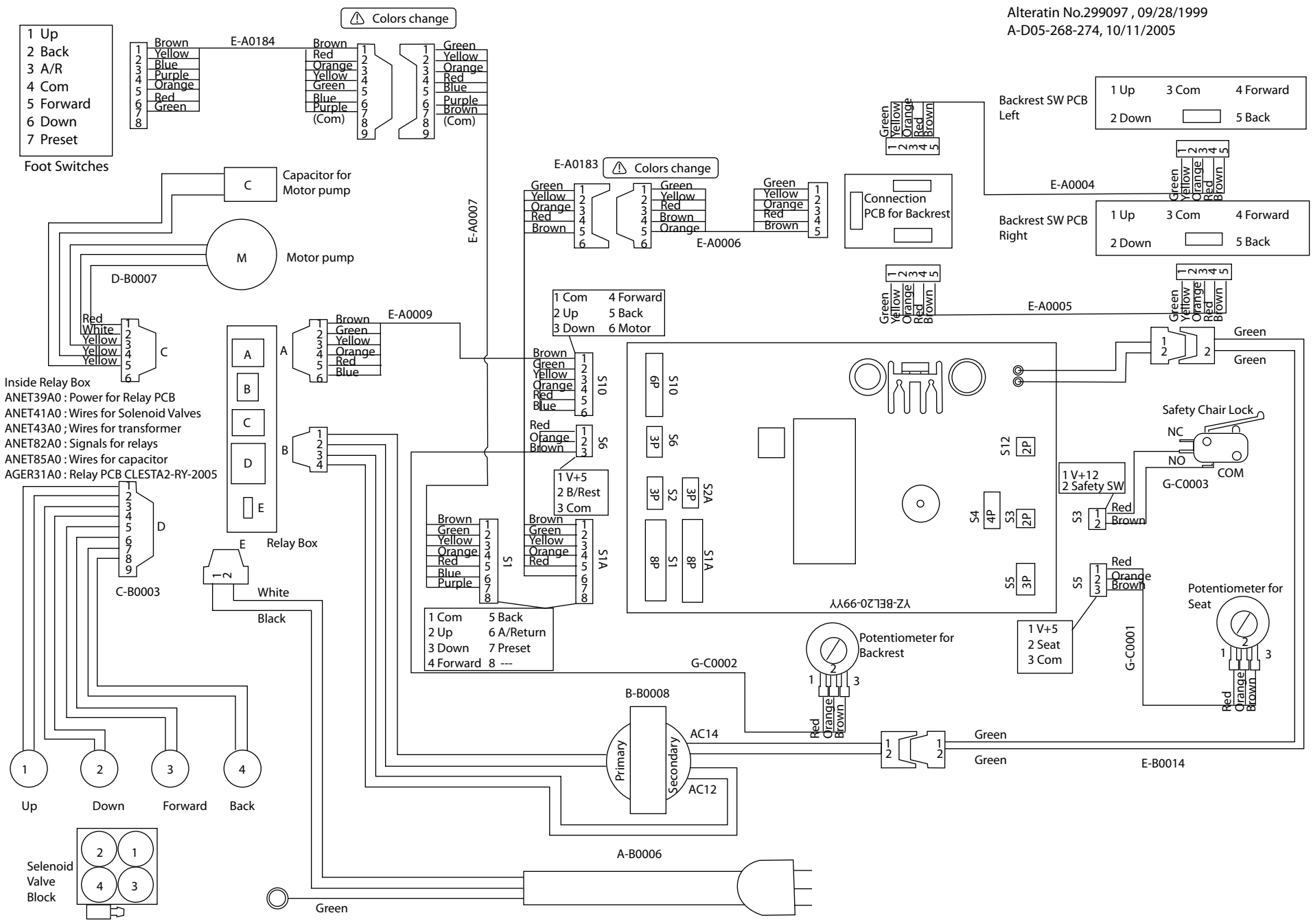DDK009Ab Model BEL-20 Overall Wiring Diagram
01/15/2001
Alteratin No.299097 , 09/28/1999
A-D05-268-274, 10/11/2005