B50 Dental Chair

Full size template

Belmont
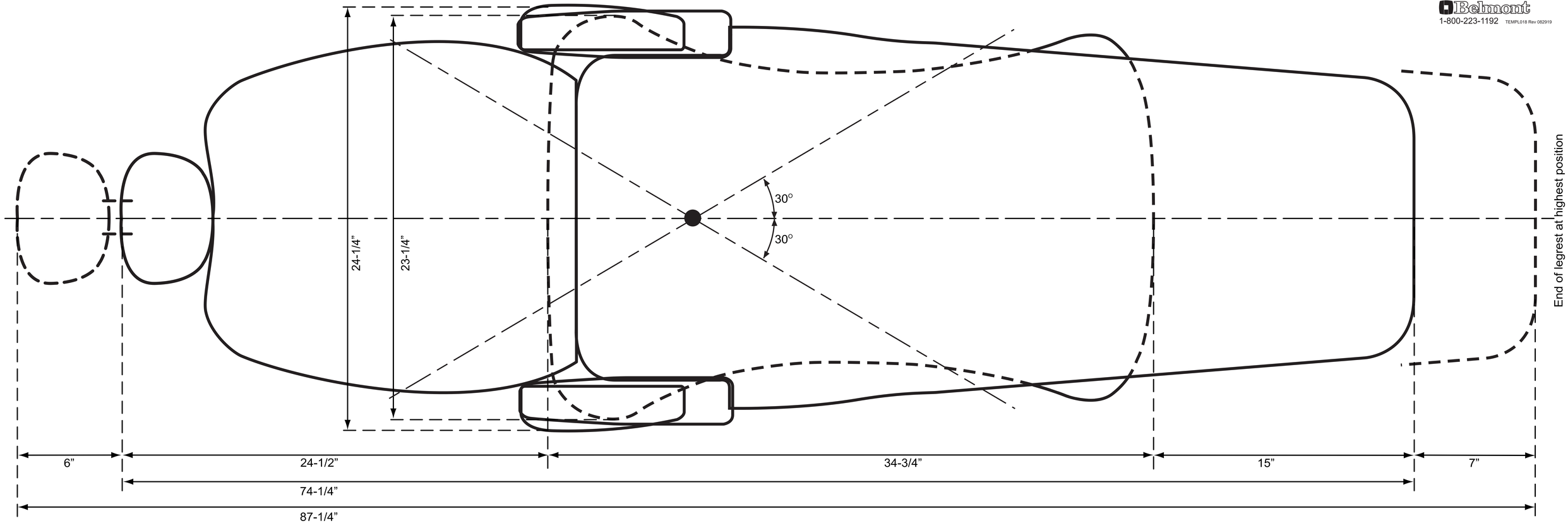
1-800-223-1192 TEMPL018 Rev 082919